675 FG3000A SCHEMATIC INPLINE POWDER SAMPLER

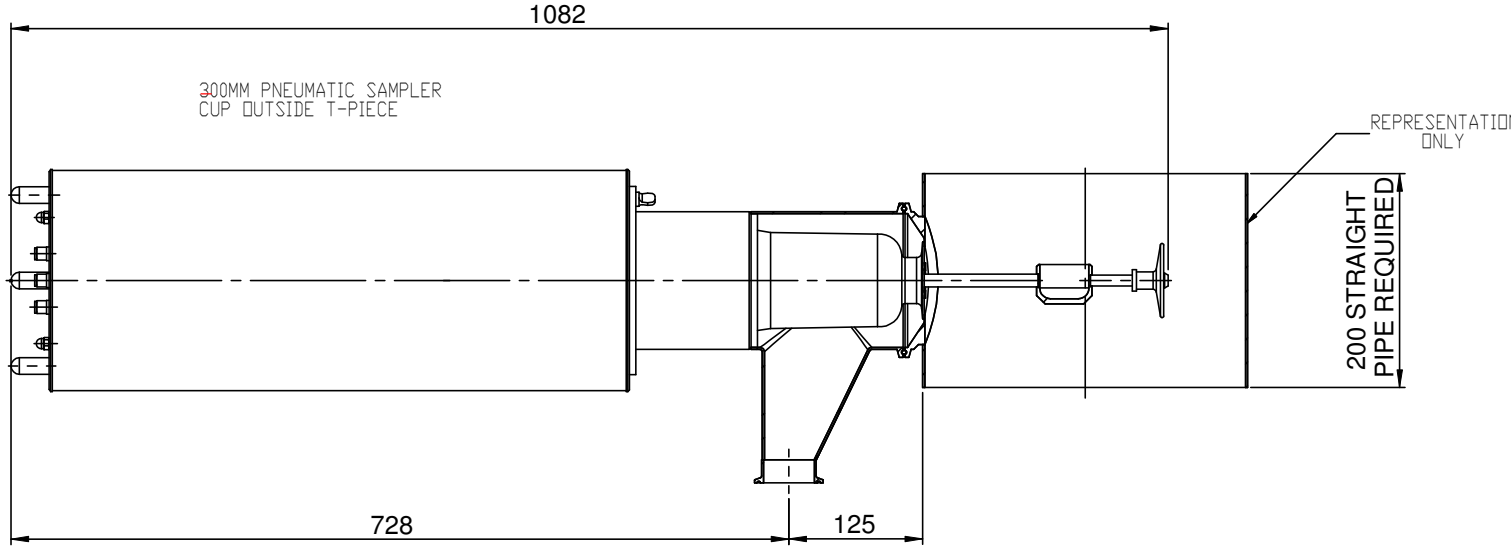

QAQC LAB
www.qclabequipment.com
WHITE STONE VA 22578
TEL (866) 244-1578

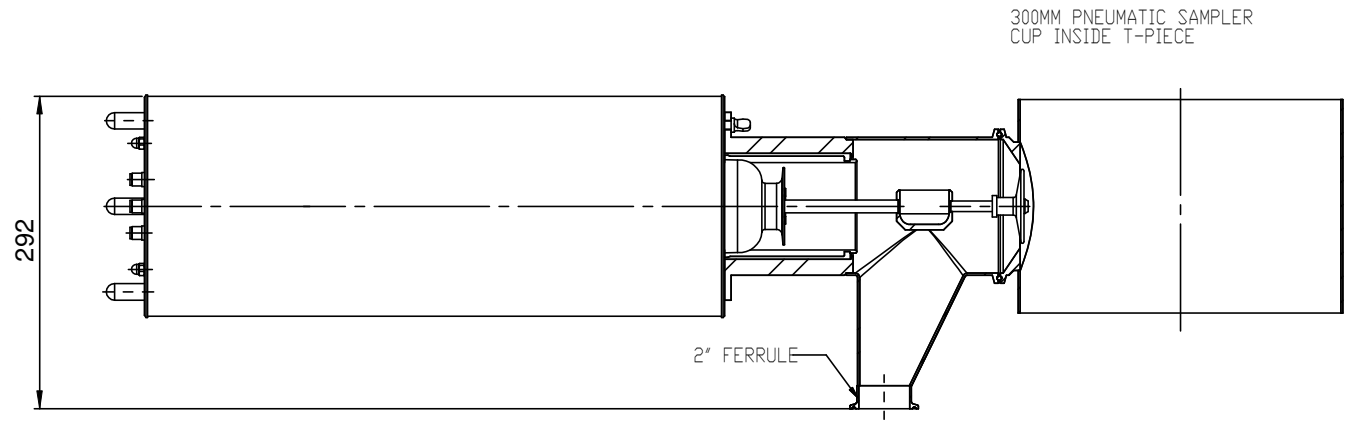

300 MM PNEUMATIC SAMPLER SHOWS 220MM STROKE